1 |

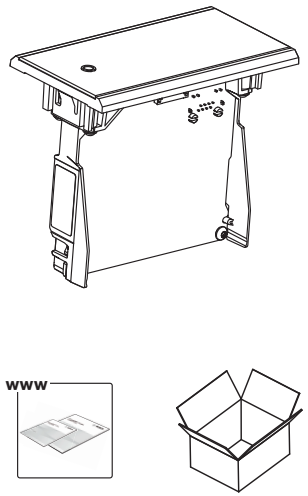
www

2 |

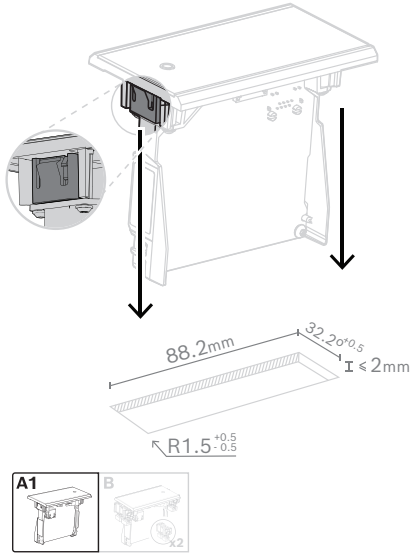
88.2mm
32.2o+0.5
I ≤ 2mm
R1.5+0.5 -0.5
A1
B
x2

3 |

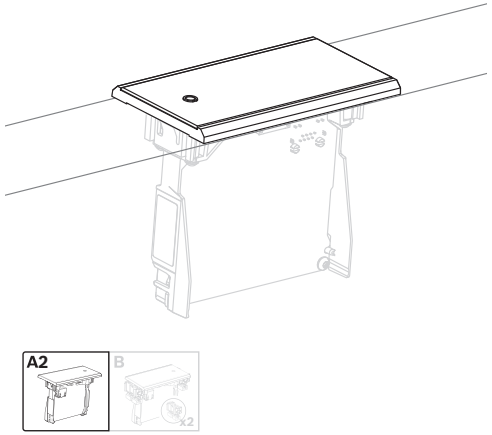
A2
B
x2

4 |

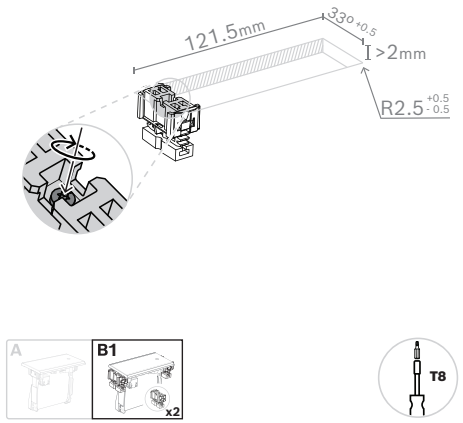
121.5mm
33o+0.5
I >2mm
R2.5+0.5 -0.5
A
B1
x2
T8

5 |

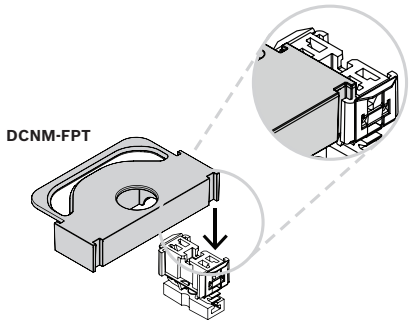
DCNM-FPT

A
B2
x2

6 |

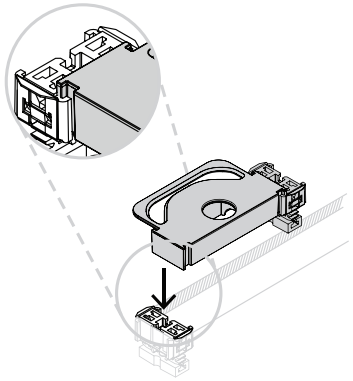

A
B3
x2

7 |

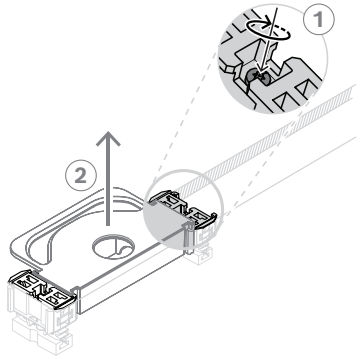
1
2

A
B4
x2
T8

8 |

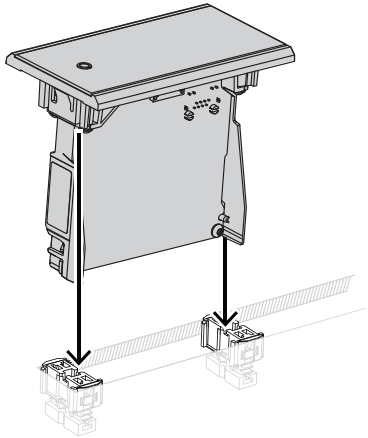

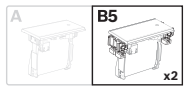
A
B5
x2

9 |

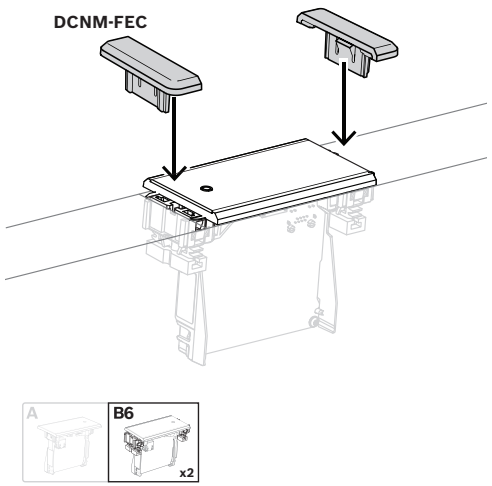

10 |

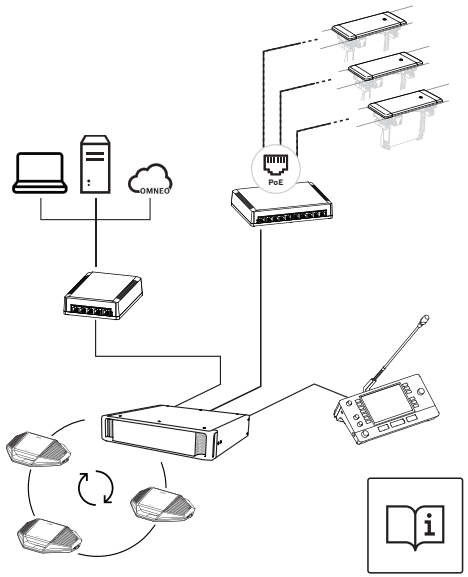

11 |

For product related information, free software download and documentation, visit:
www.boschsecurity.com

For the latest software versions, go to:
https://licensing.boschsecurity.com/software

Information about the Open Source Software used in this product is available from
http://<IpAddressOfDevice>

12 |

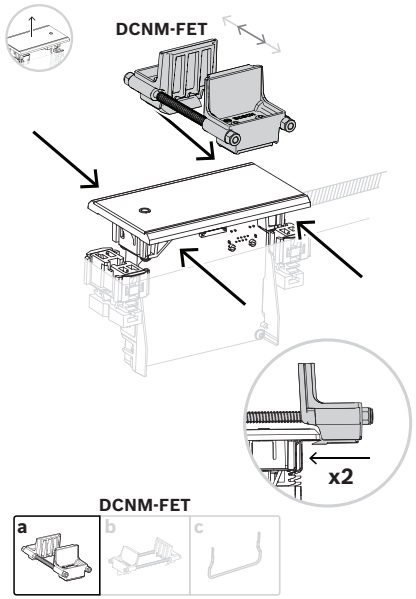

13 |

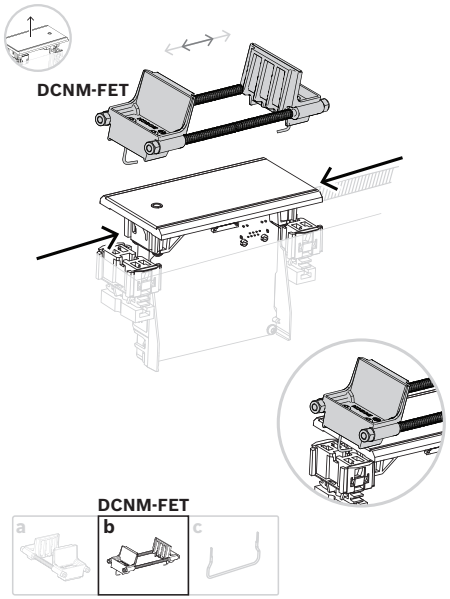

14 |

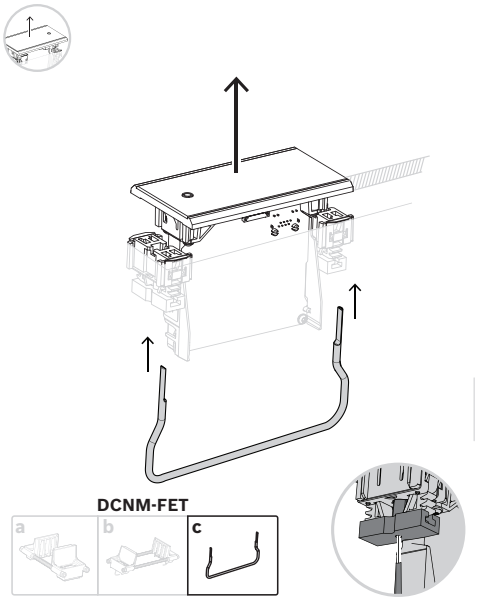

BOSCH

Flush language selector

DCNM-FSL

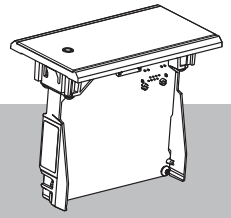

en Quick installation guide

Bosch Security Systems B.V.
Torenallee 49
5617 BA Eindhoven
Netherlands

www.boschsecurity.com
© Bosch Security Systems B.V., 2021

Building solutions for a better life.

2021.11 | V04 | F01U363664 | 202111180956